www.everything4lesstore.com

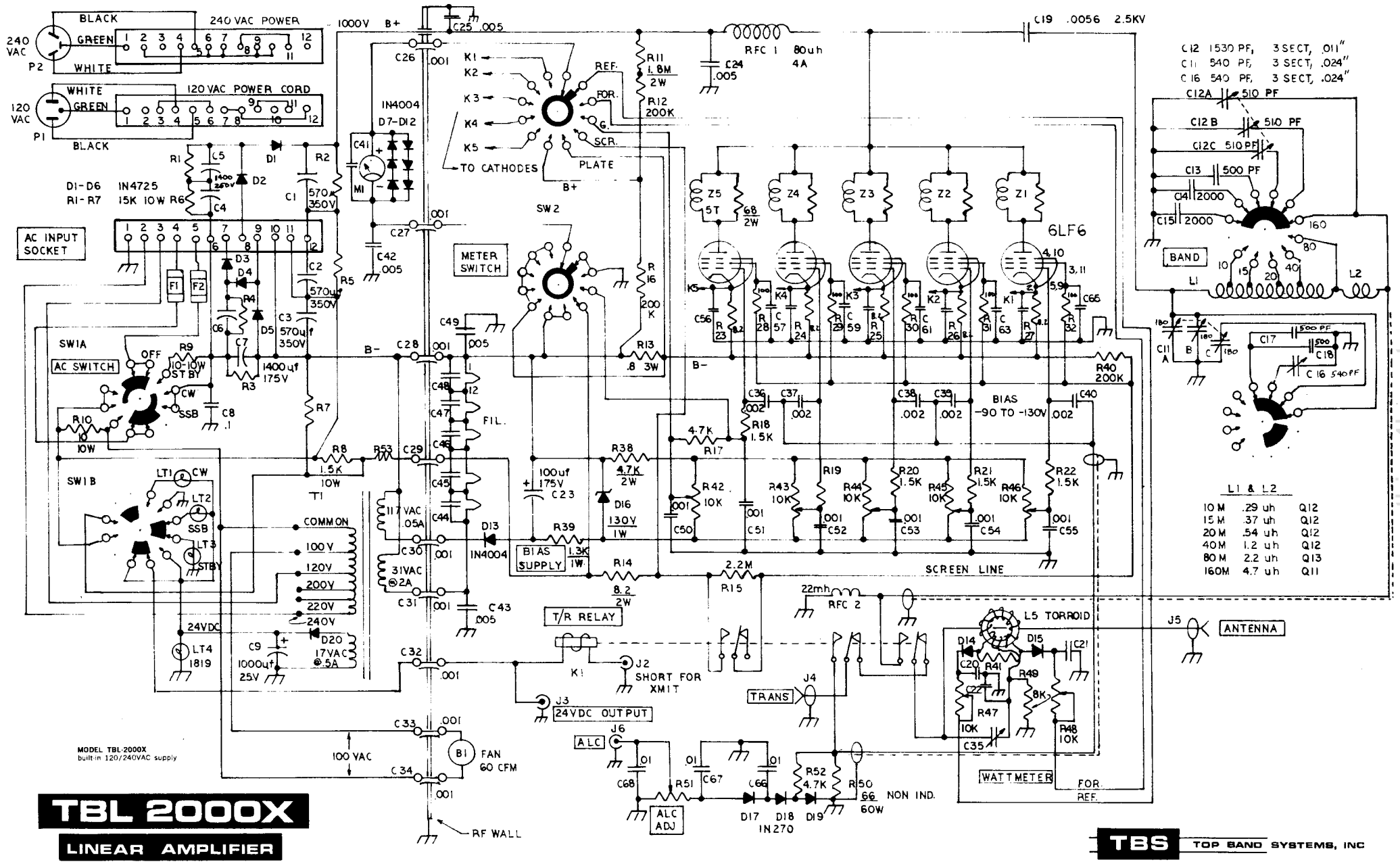

TBL 2000X

LINEAR AMPLIFIER

TBS TOP BAND SYSTEMS, INC